00	07/29–'15

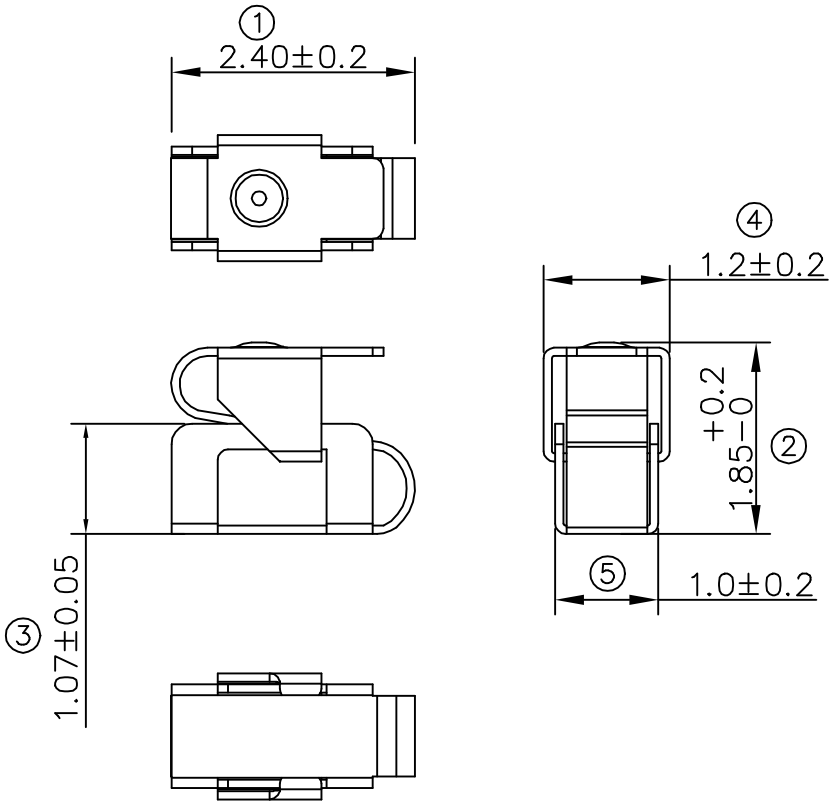

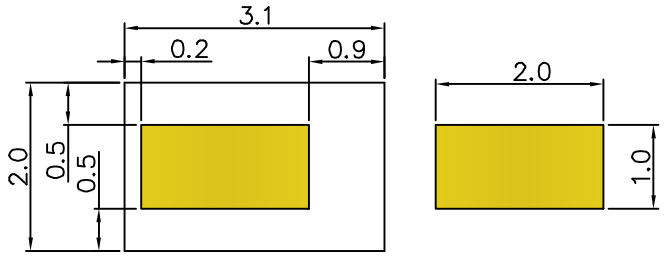

RECOMMENDED SOLDERING PCB LAYOUT

TOLERANCE(.XX±0.05)

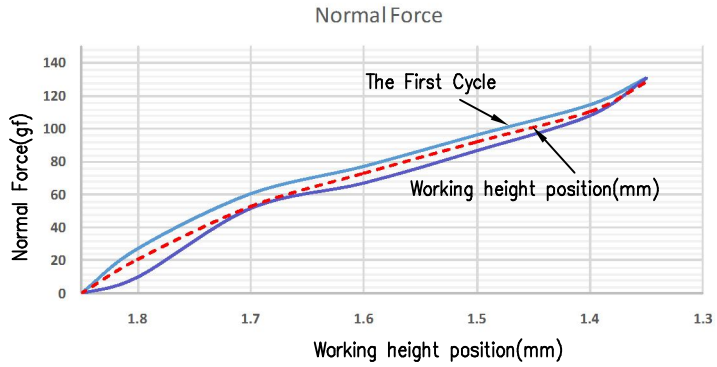

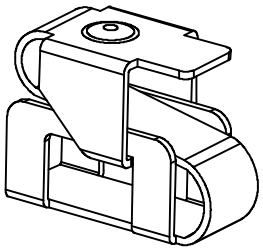

Note:
1. Material: Copper Alloy Thickness 0.08mm
2. Electroplate:
   Gold Flash on contact area
   Gold Flash on solder area
   Nickel underplating over all
3. Electrical Characteristics:
   3–1 Current Voltage: 12V
   3–2 Current Rate: 3A
   3–3 Contact Resistance: Normal Compression<30mΩ
4. Working Height of Application: 1.35~1.55mm
5. Spring Force Tolerance is ±20gf
6. Operating Temperature: −20℃~+85℃

TOLERANCE/CLASS			
RANGE(mm)	1	2	3
≤30	±0.10	0.15	0.20
30<– ≤120	±0.15	0.20	0.30
120<– ≤300	±0.20	0.30	0.50
300<	±0.30	0.50	0.80
ANGLES	±2.5°		

REV	Date	Description
00	06/19–'12	Design creation

DRAFT Hardy Hsieh	DATE 06/19–'12	RoHS Compatible	
CHECKER Gabby Weng	DATE 06/19–'12		
APPROVAL Jacky Lin	DATE 06/19–'12	SHEET 1–2	SCALE Not to scale / UNIT mm

EMI STOP CORP.

EMISTOP PS–18Q1G	CUS P/N

00	11/06-19'

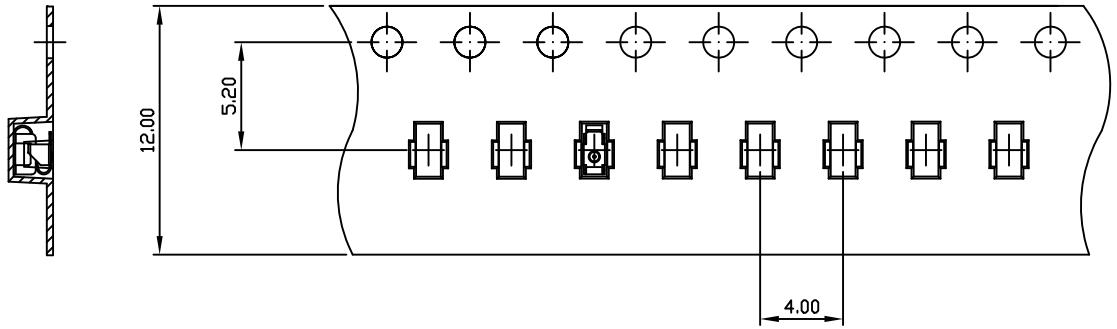

Side View

FEEDING DIRECTION

Front View

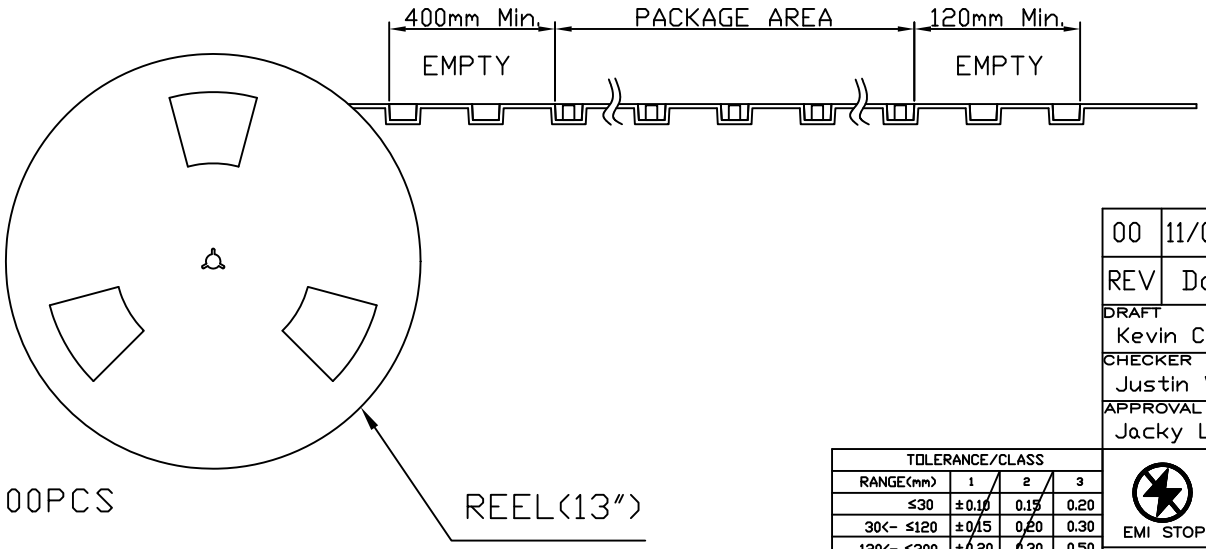

Package Information:
1.Quantity Per Reel: 8000PCS
2.REEL: 13"X 12 mm

TOLERANCE/CLASS			
RANGE(mm)	1	2	3
≤30	±0.10	0.15	0.20
30<- ≤120	±0.15	0.20	0.30
120<- ≤300	±0.20	0.30	0.50
300<	±0.30	0.50	0.80
ANGLES	±2.5°		

REV	Date	Description
00	11/06-19'	Design creation

DRAFT Kevin Chen	DATE 11/06-'19	RoHS Compatible		
CHECKER Justin Wu	DATE 11/06-'19			
APPROVAL Jacky Lin	DATE 11/06-'19	SHEET 2-2	SCALE Not to scale	UNIT mm

EMI STOP CORP.

EMISTOP PS-18Q1G	CUS P/N