00	07/22-'19

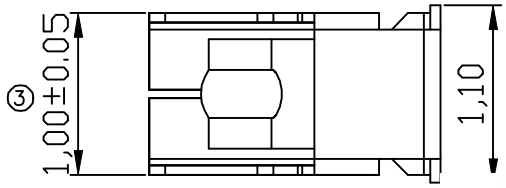

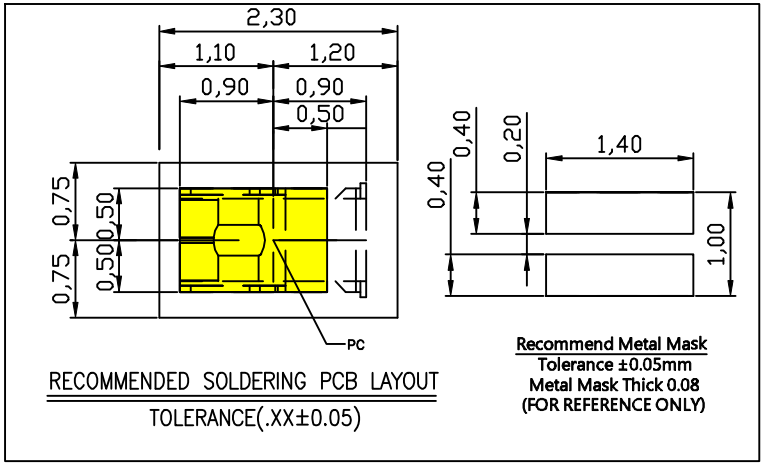

樂益科技股份有限公司
文管中心
管制文件

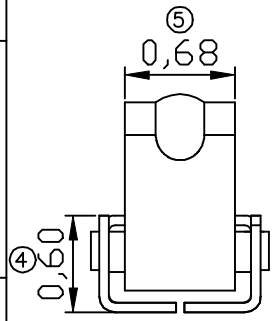

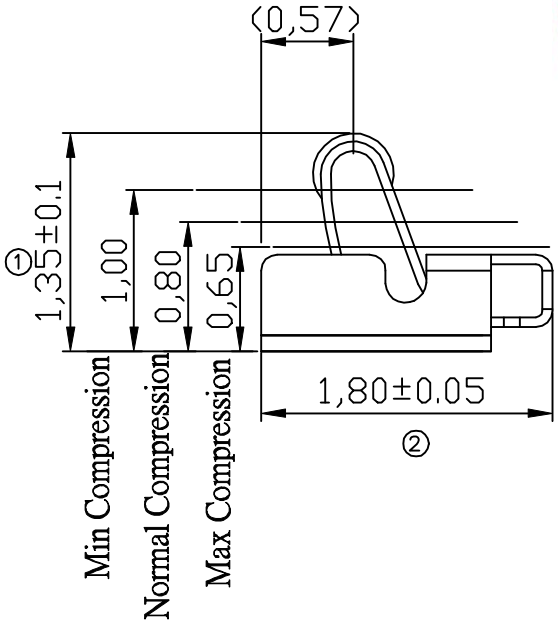

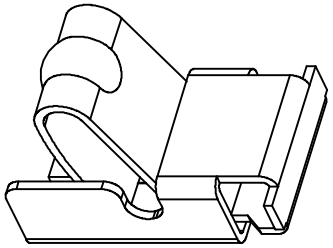

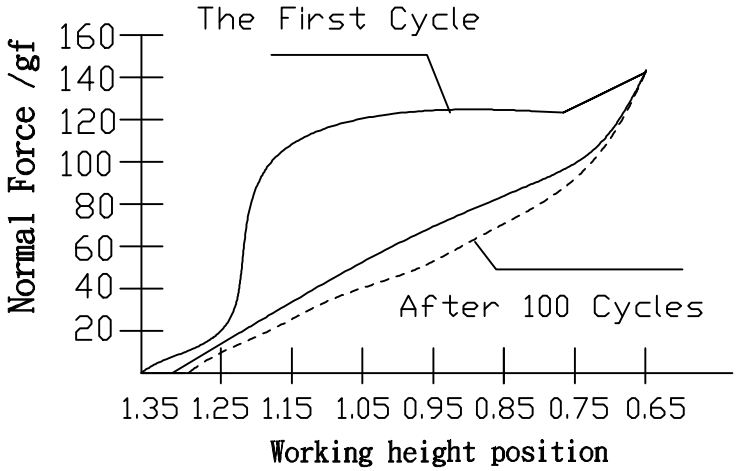

Note:
1. Material: Stainless Steel Thickness 0.06mm
2. Electroplate:
   Au >1u" gold plating on contact area
   Gold Flash on solder area
   Nickel underplating over all
3. Electrical Characteristics:
   3-1 Current Voltage: 12V
   3-2 Current Rate: 3A
   3-3 Contact Resistance: Normal Compression<50mΩ
4. Working Height of Application: 0.65~1.00 mm
5. Spring Force Tolerance is ±20gf
6. Operating Temperature: -20℃~+85℃

TOLERANCE/CLASS			
RANGE(mm)	1	2	3
≤30	± 0.1	± 0.15	± 0.2
30< - ≤120	± 0.15	± 0.2	± 0.3
120< - ≤300	± 0.2	± 0.3	± 0.5
300<	± 0.3	± 0.5	± 0.8
ANGLES	± 2.5°		

REV	Date	Description
00	07/22-'19	Design creation

DRAFT Hardy Hsieh	DATE 07/22-'19	RoHS Compatible	
CHECKER Justin Wu	DATE 07/22-'19		
APPROVAL Jacky Lin	DATE 07/22-'19	SHEET 1-2	SCALE Not to scale / UNIT mm

EMI STOP CORP.

EMISTOP SQT-13Q1G	CUS P/N