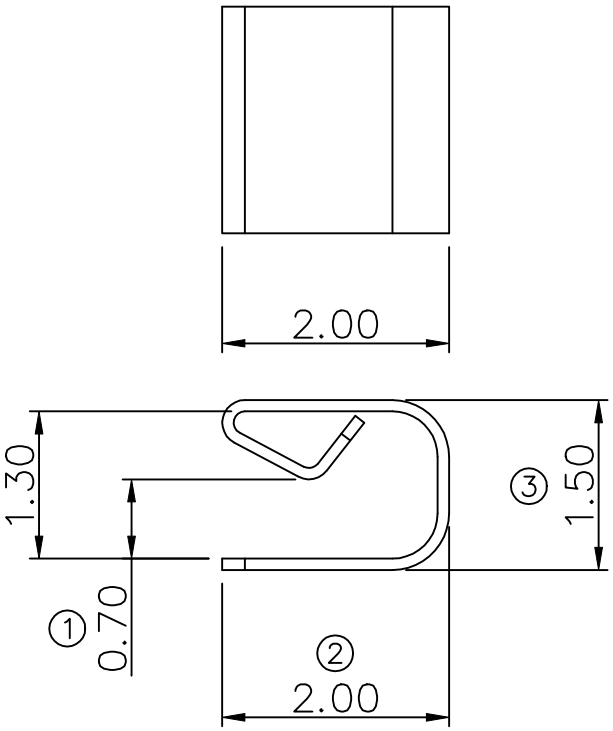

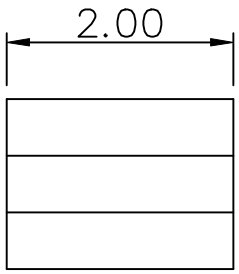

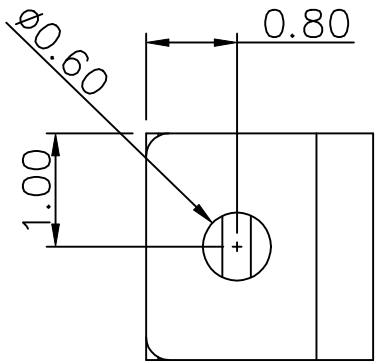

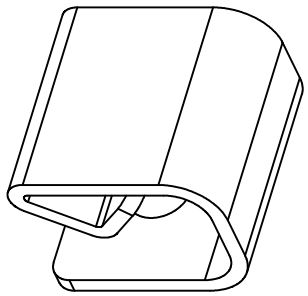

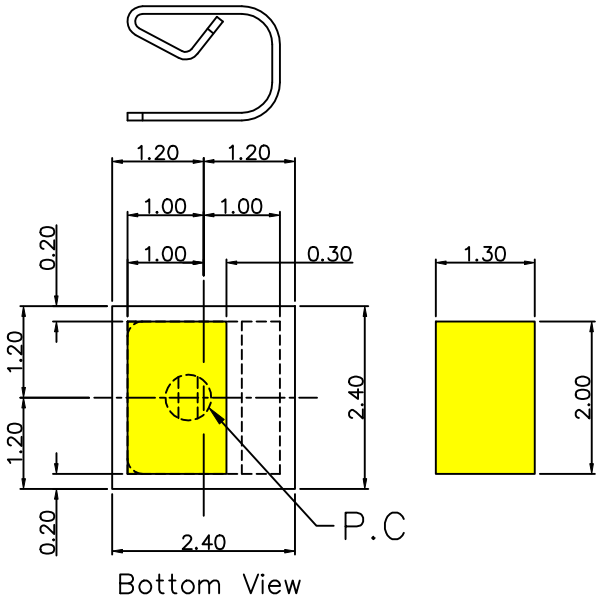

RECOMMENDED SOLDERING PCB LAYOUT

TOLERANCE(.XX±0.05)

Note:

1. **Material:** Stainless Steel **Thickness** 0.10 **mm**
2. **Eletroplate:** Nickel underplating over all, Matte Sn over all
3. **Operating Temperature: -20℃~+85℃**
4. **Recommended conditions** Ø0.9~Ø1.0mm

TOLERANCE/CLASS			
RANGE(mm)	A	B	C
≤30	±0.10	0.15	0.20
30< ~ ≤120	±0.15	0.20	0.30
120< ~ ≤300	±0.20	0.30	0.50
300<	±0.30	0.50	0.80
ANGLES	±2.5°		

樂益科技股份有限公司 文管中心 管制文件

00	2022-06-16	Design Creation				
DRAFT Jim Chiu	DATE 2022-10-06	RoHS Compatible				
CHECKER Justin Wu	DATE 2022-10-06					
APPROVAL Timothy Chen	DATE 2022-10-12	SHEET 1-2	SCALE Not to scale	UNIT mm		

EMI STOP

EMI STOP CORP.

EMISTOP P/N	CUS P/N
SU-15A2Q2M	