00	01/30-'19

樂益科技股份有限公司
文管中心
管制文件

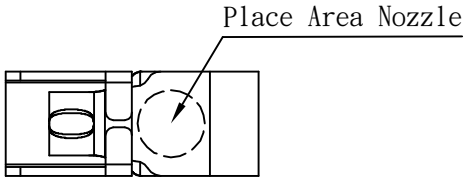

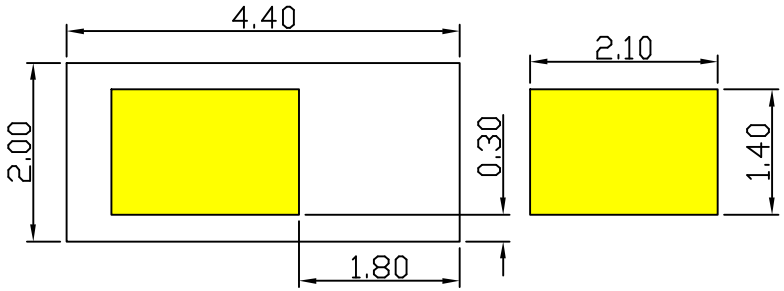

RECOMMENDED SOLDERING PCB LAYOUT

TOLERANCE(.XX±0.05)

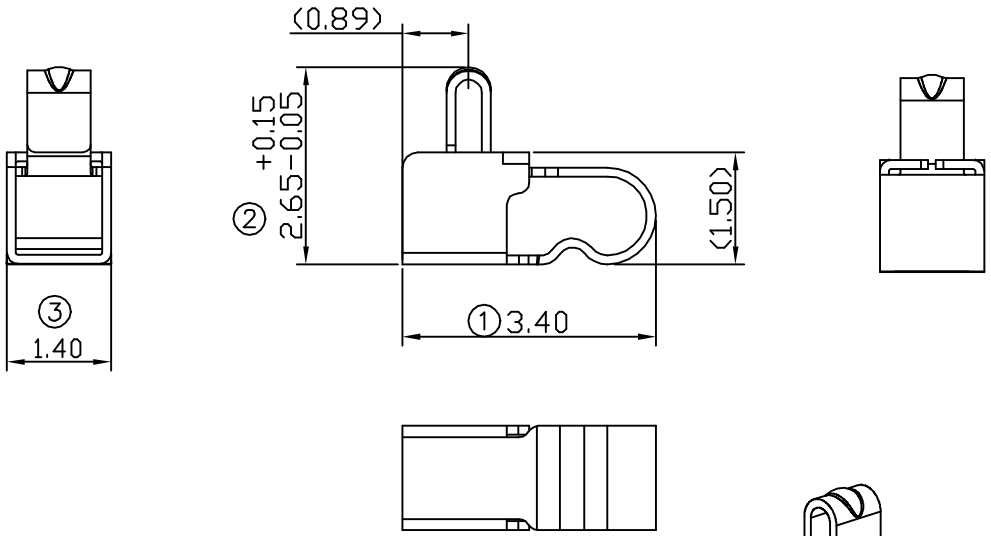

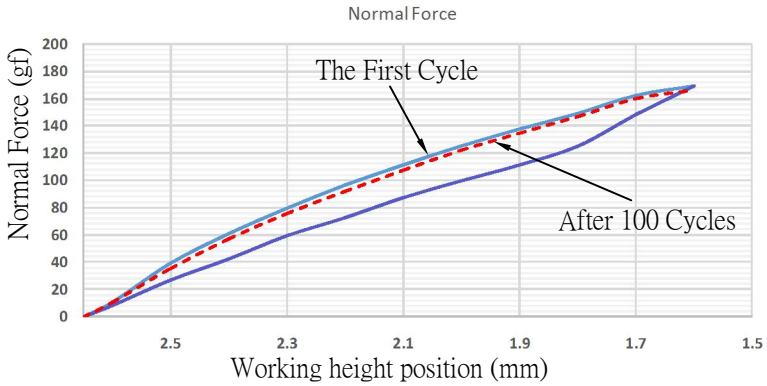

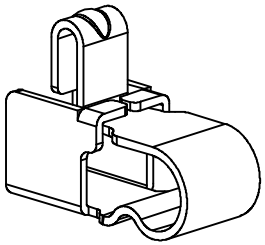

Note:
1. Material: Copper Alloy Thickness 0.12mm
2. Electroplate:
   Gold flash on contact area
   Gold Flash on solder area
   Nickel underplating over all
3. Electrical Characteristics:
   3-1 Current Voltage: 12V
   3-2 Current Rate: 3A
   3-3 Contact Resistance: Normal Compression<30mΩ
4. Working Height of Application: 1.60~2.20 mm
5. Spring Force Tolerance is ±20gf
6. Operating Temperature: -20℃~+85℃

REV	Date	Description
00	01/30-'19	Design creation

DRAFT Lydia Tsai	DATE 01/30-'19	RoHS Compatible	
CHECKER Justin Wu	DATE 01/30-'19		
APPROVAL Jacky Lin	DATE 01/30-'19	SHEET 1-2	SCALE Not to scale / UNIT mm

TOLERANCE/CLASS			
RANGE(mm)	1	2	3
≤30	±0.10	0.15	0.20
30< ≤120	±0.15	0.20	0.30
120< ≤300	±0.20	0.30	0.50
300<	±0.30	0.50	0.80
ANGLES	±2.5°		

EMI STOP CORP.

EMISTOP QTT-26G-1

CUS P/N